communications
Electrodynamics, Inc.

The Dynatime® Digital Series
Solid State, Panel Mount
Elapsed Time Indicators & Event Counters

Model DDS200: Elapsed Time Indicator
Model DDS201: Event Counter

FEATURES

- Monitors your system usage
- Panel Mount Configuration
- Non-Volatile Memory
- Meets MIL-M-7793/14
- MIL-M-7793/14 qualified model is also availble.

DDS200 Elapsed Time Indicator Series

The DDS200 solid-state Elapsed Time Indicator and the DDS201 solid-state Event Counter have been developed to meet the most difficult requirements of military and aerospace applications. In one panel mount package, the DDS200 series provides a highly reliable means of monitoring critical system usage, important for proper equipment maintenance.

The elapsed time and events data can be read via the M7793/12 reader.

The time range for the DDS200 Elapsed Time Indicator is 99999.99 hours.

DDS201 Event Counter Series

The DDS201 Event Counter meets the electrical, mechanical and environment requirements of MIL-M-7793/14 and records counts when the unit receives power for greater than 5 seconds. Power-on times of less than 4 seconds will not cause the counter to increment. The count range is 9,999,999.

MECHANICAL SPECIFICATIONS

Case Dimensions: See below for detail dimensions.
Weight: 1 ounce max.
Elapsed Time Indicator—Time Range: 99999.99 hours
Event Counter—Count Range: 9,999,999 counts
Meter Output: Serial binary coded decimal format.

ENVIRONMENTAL SPECIFICATIONS

Operating Temperature Range: -65 to +125°C
Shock: MIL-STD-202, Method 213, Condition I
Vibration: MIL-STD-202, Method 204, Condition D
Salt Spray: MIL-STD-202, Method 101, Condition B
Moisture Resistance: MIL-STD-202, Method 106, Figure 106-1
Altitude: MIL-STD-202, Method 105, 0-80,000 feet

ELECTRICAL SPECIFICATIONS

These meters meet or exceed applicable requirements of MIL-M-7793 and M7793/14. Other ratings and configurations are also available.
Operating Voltage Range: 10-34 VDC and 20-30 VAC, 50-2400Hz.
Ripple Voltage: Operates normally when subjected to the ripple requirements of 5-2-2, 5-2-2-1 and Figure 7 of MIL-STD-704A.
Output Impedance: 100 k Ω ± 10 %
Logic Zero: 0.0 to 0.2 V
Logic One: 3.3 to 6.6 V
Power Consumption: 50mW max. at 28VDC; 25mW max. at 26VAC 400Hz.
Transient Protection: No temporary or permanent degradation in meter when subjected to input voltage and time values shown in MIL-STD-704A, Figures 7 and 9, Curve 1 (600V and 80V transients, respectively).
Dielectric: Withstands 600VRMS (room) and 350 VRMS (altitude) applied between the power terminals and an external ground.
Insulation Resistance: MIL-STD-202, Method 302, Condition B
Accuracy: ± 0.1% over temperature/voltage range
EMC: MIL-STD-462, Methods CE03 and RE02

L-3 Communications / Electrodynamics • 1200 Hicks Road • Rolling Meadows, IL 60008 • Tel: 847.660-1750 • Fax: 847.660-1751 • email: edi.info@L-3com.com • www.L-3com.com/edi

The technical information contained in this marketing brochure does not contain "technology" as defined by the General Technology Note in Export Administration Regulations (EAR) Supplement number 2 to Part 744 and is therefore considered as publicly released as defined in Part 734.7 (4).

The Dynatime® Digital Series
Solid State, Panel Mount
Elapsed Time Indicators & Event Counters

Model DDS200: Elapsed Time Indicator
Model DDS201: Event Counter

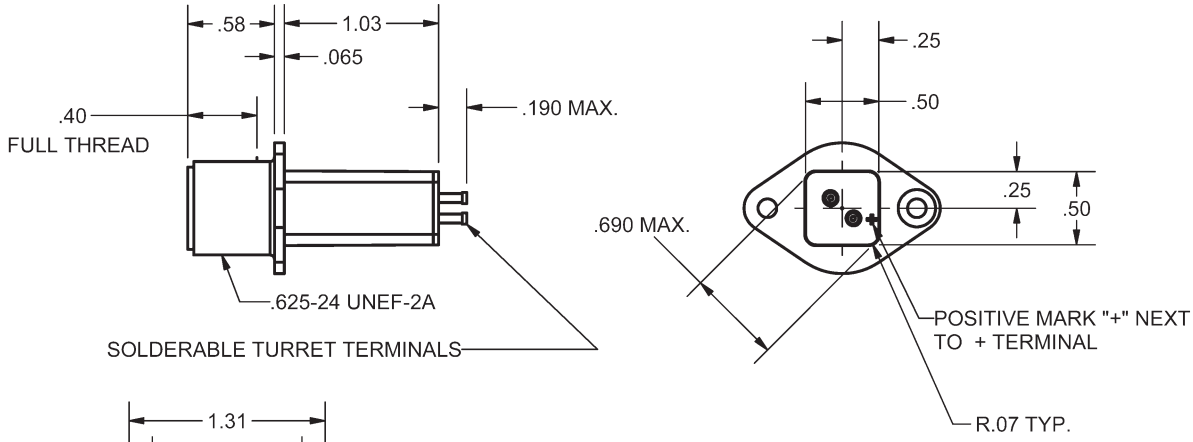

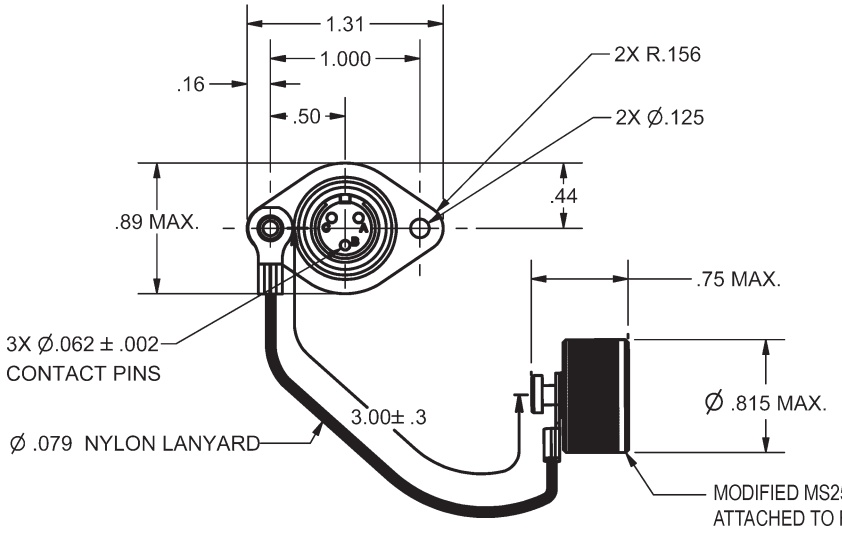

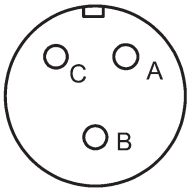

A - INPUT FROM READER

B - COMMON FROM/TO READER

C - OUTPUT TO READER

READOUT PIN ASSIGNMENT

NOTE:
Dimensions in inches.
Tolerances: Decimals:
± .02 for two-place decimals;
± .015 for three-place decimals.

The technical information contained in this marketing brochure does not contain "technology" as defined by the General Technology Note in Export Administration Regulations (EAR) Supplement number 2 to Part 744 and is therefore considered as publicly released as defined in Part 734.7 (4).